U.S. Department of Transportation
National Highway Traffic Safety Administration

CERTIFICATE OF TRUE COPY

I HEREBY CERTIFY that the annexed is a true copy of Petition Number: P80-002 From E.W. Barrows Conserning Jeep CJ5 stability during off-road use.

on file in the Technical Reference Division, National Highway Traffic Safety Administration, in my custody.

Signed and dated at Washington, D.C.

this 7th day of August, 19 87

by Jerome A. Holiber

Jerome A. Holiber
Chief, Technical Reference Division
(Title)

I HEREBY CERTIFY that Jerome A. Holiber

who signed the foregoing certificate, is now, and was, at the time of signing, Chief, Technical Reference Division, National Highway Traffic Safety Administration,

and official custodian of the subject record, and that full faith and credit should be given his/her certificate as such.

IN WITNESS WHEREOF, I have hereunto subscribed my name, and caused the seal of the Department of Transportation to be affixed this 7th day of August one thousand nine hundred and eighty-seven

For the SECRETARY OF TRANSPORTATION

Annie M. Robinson
Annie M. Robinson — Certifying Officer
Acting NHTSA Records Officer

HS Form 126 (Rev. 4-82)

Petition Number: P80 [redacted]-002

From E.W. Barrows

Concerning Jeep CJ5 stability during off-road use

35p.

OFFICE OF DEFECTS INVESTIGATION

MASTER INDEX
PETITION FILE P80-002

Date	Sequence	Subject	Class.
10-08-79	P80-002-1	Letter: To NHTSA from E.W. Barrows. Petition request concerning Jeep CJ5 stability during off-road use.	P
10-24-79	P80-002-2	Letter: To E.W. Barrows from NHTSA. Acknowledgement of petition request.	P
10-29-79	P80-002-3	Letter: To American Motors Corporation (AMC) from the National Highway Traffic Safety Administration (NHTSA).	P
12-07-79	P80-002-4	Letter: To NHTSA from AMC. Reply to NHTSA information request dated 10-29-79.	P
01-11-80	P80-002-5	Memo: To Office of Chief Counsel (OCC) from Office of Defects Investigation (ODI).	P
01-23-80	P80-002-6	Letter: To AMC from NHTSA. Response to AMC confidentiality request.	P
01-24-80	P80-002-7	Letter: To NHTSA from E.W. Barrows. Enclosed newspaper article concerning petition subject.	P
02-11-80	P80-002-7a	Letter: To NHTSA/OCC from AMC. Reply to NHTSA/OCC ruling on confidentiality.	P
02-13-80	P80-002-8	Letter: To E.W. Barrows from NHTSA. Notification of denial of petition request.	P
02-22-80	P80-002-9	Letter: To Federal Trade Commision (FTC) from NHTSA. Response to FTC telephone request for information concerning petition subject.	P

Records classified by "0" in the class column are exempt from public file disclosure, pursuant to 5 U.S.C. 552(b).

OFFICE OF DEFECTS INVESTIGATION

MASTER INDEX
PETITION FILE

Date	Sequence	Subject	Class.
03-10-80	P80-002-10	Letter: To AMC from NHTSA/OCC. Further response to AMC confidentiality request.	P

Records classified by "0" in the class. column are exempt from public disclosure, pursuant to 5 U.S.C. 552(b).

6609 Mt. Holly Drive
San Jose, California 95120
October 8, 1979

Ms. Joan Claybrook, Director
National Highway Traffic Safety Administration
Washington, D.C. 20590

Dear Ms. Claybrook,

Under the provisions of the National Traffic and Motor Vehicle Safety Act, I would like to petition to have an investigation conducted into the safety and stability of the soft top Jeep (CJ5) manufactured by American Motors for the purpose for which they are widely advertised in the media, mainly off road use.

On November 5, 1978 my son David Allen Barrows, age 15, was killed in a jeep while the owner of the jeep was climbing a hill in Patterson, California in an area off road widely used by four wheel vehicle owners. (See attached newspaper articles) The vehicle hit a rut and rolled over several times killing my son and seriously injuring the driver and his young son. A short time later, a collegue of mine lost his 16 year old nephew in very similar accident and on Sunday, September 23rd of this year, another 15 year old was killed in almost the identical circumstances (See attached newspaper article)

It is my opinion that this vehicle with its high center of gravity and short and narrow wheelbase is totally unsafe on or off the road. I further believe that the presence of a totally inadequate roll bar gives the driver and passengers a false sense of security. It is particularly galling to me to see how widely this vehicle is advertised bouncing up and down rough off highway teraine when it is apparent that the slightest rut or bump is apparently enough to tip it over with disasterous results.

I understand that there has been some kind of a study conducted on the roll bar on this vehicle after many compaints by citizens and inquiries by attornies and that the design and location were found seriously lacking. It is my opinion that my son was killed by the roll bar striking his head. He was strapped in and I believe he died because of the instability of the vehicle and its overall design.

Since there have been three young men killed in this immediate area in less that eleven months that I am aware of, I am sure that if the statistics were gathered over the last several years on the deaths and injuries this vehicle has caused. they would be appalling. The military version of the vehicle has a widespread reputation of having caused thousands of deaths and injuries since it was first used by the military in World War II.

I would appreciate hearing from you as to whether or not any action will result from this request, and if not, what else I and other concerned citizens must do to get some action on this request. I have been in contact with an aide to Mr. Ralph Nader and I understand they have received numerous complaints about this vehicle and they have begun to gather information. Their office recommended that I contact you hoping that your agency will follow up. I would be glad to supply pictures and witness accounts of my son's accident if this information would be helpful.

Hoping to hear from you,

Edward W. Barrows

Edward W. Barrows

when Jeep rolls

A 15-year-old San Jose boy was killed, but his two companions escaped serious injuries when a Jeep driven by the youth rolled several times as it descended a hill near the Guadalupe Reservoir in San Jose's Almaden Valley.

Killed in the Sunday afternoon accident was Gilbert Robert Felix, son of Robert and Rita Felix of San Jose, said a spokesman for the Santa Clara County Coroner's office.

Felix died of multiple injuries, the coroner's spokesman said.

California Highway Patrolman Richard Grogan said Felix was driving his father's Jeep at the base of Mount Umunhum and was descending a hill on a narrow trail when one of the vehicle's front wheels apparently caught in a rut.

San Jose Mercury-News
Monday September 24, 1979

Son of school principal

Youth dies in hill mishap

A memorial service will be held this evening for David Barrows, 15, son of the principal of Pioneer High School in San Jose, who was killed over the weekend on a vehicular hill-climbing course near Patterson.

Young Barrows was dead on arrival Sunday morning at Del Puerto Hospital in the Stanislaus County community.

California Highway Patrol Officer George Austin said the teen-ager was a passenger in the Jeep driven by Terry Boyer, 28, of San Jose. Boyer received moderate injuries, as did his son, Cheyenne, 8, when the vehicle slipped into a rut in the slope known as Suicide Hill, turned sideways and rolled over. Cheyenne was ejected, but the other two occupants were strapped in and rode the Jeep to the bottom of the hill, Austin said.

The officer said Boyer was climbing Suicide Hill to aid someone in a disabled Jeep.

The accident was the third fatality in two years in a rough terrain area 50 miles west of Modesto which is owned by Stanislaus County and used for hill-climbing by four-wheel-drive vehicles. Austin said Suicide Hill is the most treacherous of several hills in the area.

Barrows' father, Edward W. Barrows, has been principal of Pioneer High for the past three years. Prior to that he
principal of San Jose High
teen-ager was a student a
land High School. He live
the family home in
Jose. Besides his mother
father, Barrows is survive
a sister, Terri Cavrikas.
two brothers, Michael
Steven Barrows, all of
Jose, and his grandparents
and Mrs. L. Gordon Aver
Portland, and Mildred E.
rows of Sunnyvale and L
ence T. Barrows of Oregon

Tonight's service will b
7:30 o'clock in the Episc
Church in Almaden, 6581
maden Ave. Lima Family
ickson is in charge of arra
ments.

Principal's son dies in vehicle misha

PATTERSON — The teen-aged son of the principal of Pioneer High School in San Jose was killed when a hill-climbing Jeep rolled down Suicide Hill.

David Barrows, 15, was dead on arrival Sunday morning at Del Puerto Hospital here.

CHP Officer George Austin said the teen-ager was a passenger in the Jeep driven by Terry Boyer, 28, of San Jose. Boyer received moderate injuries, as did his son, Cheyenne, 8, when the Jeep slipped into a rut in the hill, turned sideways and rolled over. Cheyenne was ejected, but the other two occupants were strapped in and rode the Jeep to the bottom of the hill, Austin said.

The officer said Boyer was climbing Suicide Hill to aid someone in a disabled Jeep.

The accident was the third fatality in two years in a rough terrain area 50 miles west of Modesto which is owned by Stanislaus County and used for hill-climbing by four-wheel-drive vehicles. Austin said Suicide Hill is the most treacherous of several hills in the area.

Boyer and his son received "moderate" injuries, the CHP said. The hospital said the two were in "stable condition" and probably would be going
"in a day or so." But a nu
official refused to revea
nature of their injuries.

Barrows' father, Ed
has been principal of Pi
High for the past three
Prior to that he was pri
of San Jose High. The
ager was a student at L
High School. He lived wi
family at 6609 Mount Hol

about two ...

Death Notices

BARROWS, David A. — Entered into rest Patterson, California, November 6, 1978 David A. Barrows loving son of Mr. and Mrs. Edward W. Barrows of San Jose. Dear brother of Terri Cavrikas of San Jose, Michael Barrows of San Jose, Steven Barrows of San Jose. Dearest grandson of Mr. and Mrs. L. Gordon Avery of Portland and Mildred E. Barrows of Sunnyvale and Mr. Lawrence T. Barrows of Oregon. A native of San Jose, California. Age 15 years.

Friends are invited to attend memorial services Tuesday, November 7, 1978 at 7:30 p.m. at the Episcopal Church, 6581 Camden Ave., in Almaden. Donations to the church landscaping fund would be appreciated. Burial will be private under the direction of Lima Family Erickson.

OCT 24 1979

NEF-13rc
PO-002

Mr. Edward W. Barrows
6609 Mt. Holly Drive
San Jose, California 95120

Dear Mr. Barrows:

This is to acknowledge the receipt of your petition of October 8, 1979, requesting that an investigation be initiated to determine whether the failure of the roll bar and the alleged problem of stability in American Motors Jeeps constitute a defect which could result in a safety recall campaign.

Any additional information, including photographs, illustrations, vehicle identification numbers, vehicle speed, etc., that you can provide on the accidents you described would be appreciated.

In accordance with Title 49 CFR, Part 552, the National Highway Traffic Safety Administration will conduct a technical review of the available information and will notify you whether the petition is granted not more than 120 days from the date your petition was received, October 11, 1979.

Sincerely,

Lynn L. Bradford

Lynn L. Bradford
Associate Administrator
for Enforcement

REGISTERED MAIL
RETURN RECEIPT REQUESTED

OCT 29 1979

REF-13wh
PO-002

Mr. George E. Brown
Executive Director
American Motors Corporation
14250 Plymouth Road
Detroit, Michigan 48232

Dear Mr. Brown:

The National Highway Traffic Safety Administration (NHTSA) has received a petition for a defect investigation into the stability of the Jeep CJ-type multipurpose vehicles and the adequacy of the Jeep roll bar. A copy of the petition is enclosed for your information.

In order for us to make an initial evaluation of the allegations presented by the petitioner, some additional information is required. Therefore, under Sections 103 and 112 of the National Traffic and Motor Vehicle Safety Act (the Act) numbered responses to the following items are required:

1. Furnish the number and copies of all reports, studies, surveys, tests, or investigations from all sources, either received by or authorized by American Motors (AMC)/Jeep pertaining to the stability (or lack of stability) of the Jeep multipurpose (CJ-type) vehicle. The sources are to include but not be limited to AMC/Jeep personnel, suppliers, dealers, or field service reports.

2. Furnish the number and a brief description of all accidents and subrogation claims which were allegedly caused by or attributed to the instability of the CJ-type vehicle.

3. Identify all lawsuits, both pending and closed, by title, location, and docket number in which AMC/Jeep is or was a defendant against allegations pertaining to alleged instability of the CJ-type vehicle. Describe the basis for each lawsuit and the outcome of litigation to date.

4. Identify and describe all conditions of vehicle use, other than competitive events or commercial use, in which the CJ-type vehicle's warranty would be considered by AMC/Jeep to be void.

5. Identify by dimensional diagram the location of the center of gravity on a 1977 CJ-5 and CJ-7 base model vehicle without occupants. Describe the variability of the center of gravity for the 1977 model vehicles compared to other model year vehicles.

6. Identify the location of the front and rear roll centers of the 1977 CJ-5 and CJ-7 base model vehicles without occupants. Describe any variability between the roll centers on the 1977 CJ-type vehicles and other model year vehicles.

7. Provide AMC's analysis of the petitioner's allegations and accident, and provide the results and findings of the inquiry.

8. Provide AMC's analysis of the stability of the CJ-type multipurpose vehicle under both on and off highway conditions.

Your written response in duplicate referencing the identification codes in the upper right corner must be submitted to this Office within 20 working days from receipt of this letter.

Sincerely,

Lynn L. Bradford

Lynn L. Bradford
Acting Director
Office of Defects Investigation
Enforcement

Enclosure:

[illegible] multipurpose (CJ-type) veh[illegible]
include but not be limited to AMC/Jeep perso[illegible]
[illegible] field service reports

Jeep Corporation
14250 Plymouth Road
Detroit, Michigan 48232

December 7, 1979

Mr. Lynn L. Bradford, Acting Director
Office of Defects Investigation
Enforcement
National Highway Traffic Safety Administration
U.S. Department of Transportation
400 Seventh Street, S.W.
Washington, D.C. 20590

Reference: NEF-13wh: PO-002

Dear Mr. Bradford:

This responds to your October 29, 1979 request for information regarding the alleged susceptibility of Jeep CJ multipurpose passenger vehicles to lateral rollover and provides related stability information known to Jeep Corporation at the time of this inquiry.

Your inquiry references Sections 108 and 112 of the National Traffic and Motor Vehicle Safety Act (the Act). The petition for a defect investigation in this matter is predicated on vehicle use in an off-highway application. In light of the stated purpose of the Act, "to reduce traffic accidents and deaths and injuries to persons resulting from traffic accidents," we question the NHTSA's authority under the Act relating to this type of vehicle application. Nevertheless, we are providing information on 1974 through 1979 model year Jeep CJ vehicles.

Each of your items is stated verbatim prior to our response. Our responses to items two, three, five, and six of your inquiry contain information that is confidential and is entitled to confidential treatment under the applicable statutory provisions including exemption 4 to the Freedom of Information Act, 5 U.S.C. Section 552(b)(4). The release of this information to the public would cause substantial harm to the competitive position of Jeep Corporation and we therefore request such confidential treatment of our responses for those above items.

1. Furnish the number and copies of all reports, studies, surveys, tests, or investigations from all sources, either received by or authorized by American Motors (AMC)/Jeep pertaining to the stability (or lack of stability) of the Jeep multipurpose (CJ-type) vehicle. The sources are to include but not be limited to AMC/Jeep personnel, suppliers, dealers, or field service reports.

Jeep Corporation has not received and has not requested any such investigative activity; Jeep Corporation does not believe that there is any need to initiate such activity.

2. Furnish the number and a brief description of all accidents and subrogation claims which were allegedly caused by or attributed to the instability of the CJ-type vehicle.

and

3. Identify all lawsuits, both pending and closed, by title, location, and docket number in which AMC/Jeep is or was a defendant against allegations pertaining to alleged instability of the CJ-type vehicle. Describe the basis for each lawsuit and the outcome of litigation to date.

Jeep Corporation is unaware of any accidents or subrogation claims which were allegedly caused by or attributed to the instability of the CJ-type vehicle except for a few which involve a lawsuit. Those lawsuits not previously reported to the NHTSA, both pending and closed, are listed in Attachment I by case title, location, and docket number, along with the basis for each lawsuit and the outcome to date.

It is common in product liability lawsuits for plaintiffs' attorneys to allege numerous alternative and often conflicting theories of liability, some of which may later be abandoned. Any attempt to draw conclusions about Jeep CJ vehicles from the lawsuits listed in answer to item seven must be made with due consideration for this fact of legal life.

4. Identify and describe all conditions of vehicle use, other than competitive events or commercial use, in which the CJ-type vehicle's warranty would be considered by AMC/Jeep to be void.

The Jeep Corporation warranty policies and exclusions for the 1974 through 1979 model year vehicles are provided in the enclosures.

5. Identify by dimensional diagram the location of the center of gravity on a 1977 CJ-5 and CJ-7 base model vehicle without occupants. Describe the variability of the center of gravity for the 1977 model vehicles compared to other model year vehicles.

Through empirical methods, Jeep Corporation has determined the centers of gravity for a base 1978 Jeep CJ-5 and CJ-7. They are depicted below. Further empirical studies of Jeep CJ vehicles indicate that the center of gravity locations are essentially the same for 1974-79 vehicles.

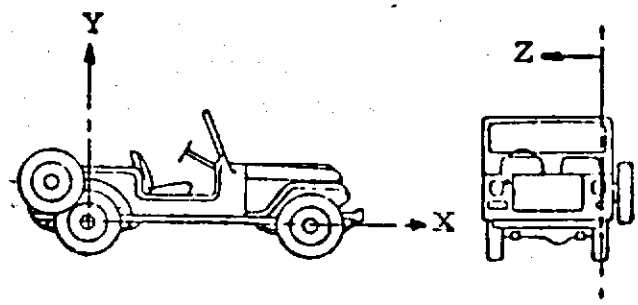

Center of Gravity Location (inches)

	X-Distance	Y-Distance	Z-Distance
Jeep CJ-5	43	10	25
Jeep CJ-7	53	10	25

6. Identify the location of the front and rear roll centers of the 1977 CJ-5 and CJ-7 base model vehicles without occupants. Describe any variability between the roll centers on the 1977 CJ-type vehicles and other model year vehicles.

The front and rear roll centers for both the 1977 Jeep CJ-5 and CJ-7 vehicles are approximately as follows:

Front: 14 inches above ground
Rear: 14 inches above ground

The expected variability from these or other model years is minimal.

7. Provide AMC's analysis of the petitioner's allegations and accident, and provide the results and findings of the inquiry.

Jeep Corporation has obtained and evaluated a copy of the California Highway Patrol (CHP) police report dated November 6, 1978 (Attachment II) on this matter. It is apparent from this report that the driver attempted to negotiate rough terrain called "Suicide Hill" with a grade of over 60%. About 3/4 of the way up the face of the hill, his vehicle lost traction, may have hit a rut and turned sideways. Once it was sideways on this very steep hill, it overturned. The CHP investigating officer, as noted in his report, determined the cause of the accident to be improper driving, an extremely steep grade and a driver unfamiliar with the terrain.

The petitioner states that several other accidents have occurred on "Suicide Hill". He does not even claim that these accidents involved Jeep CJ's. This information can only serve to demonstrate that it is the area that is dangerous. Its very name suggests such danger. Indeed, most vehicles which are turned sideways on a 60% grade are very likely to roll over. This is not due to any defect in these vehicles but is attributable solely to the laws of nature.

The CHP report indicated that the subject vehicle is a 1975 CJ-5. From an examination of the photographs accompanying that report, it appears the subject vehicle was equipped with non-OEM type equipment. Specifically, the tires appear to be 11-15 LT with an outside diameter of 30.6 inches. The largest tires Jeep Corporation released for that model year were H78-15 with an outside diameter of 28.87 inches. Additional non-OEM equipment on the accident vehicle included a heavy-duty-type rear bumper hitch and rear tire and can carrier. These modifications would doubtless affect the vehicle's performance under the conditions to which it was subjected.

Notwithstanding these facts, the petitioner claims that the accident was caused by the design of the Jeep CJ-5, which he claims is unsafe. In his October 8, 1979 letter to the NHTSA, he provides no support for this allegation other than a reference to an accident his son was involved in and a newspaper account of an incident of unknown circumstances which may not even involve a Jeep Corporation product. (Although the newspaper article refers to a "Jeep", we have noted previous instances wherein the media have misused our trademark "Jeep" to describe all 4-wheel-drive vehicles.) The petitioner also makes reference to the World War II military vehicles from which the CJ-type vehicles were derived. His claim that these vehicles have a poor safety reputation is incorrect; he is apparently confusing these vehicles with some of the post-war military vehicles. There have been some allegations that these post-war vehicles are unsafe but these vehicles were not designed by Jeep Corporation or any of its predecessor companies and are, in fact, fundamentally different from CJ-type vehicles in both design and construction.

8. Provide AMC's analysis of the stability of the CJ-type multipurpose vehicle under both on and off highway conditions.

Our CJ-type vehicles are designed to meet the needs of off-highway operation in that they are 4-wheel-drive vehicles with approach angle greater than 28 degrees, breakover angle greater than 14 degrees, departure angle greater than 20 degrees, and running clearance greater than eight inches. The type of terrain these vehicles must be capable of operating on far exceeds the capability of passenger cars. Our field experience confirms that these vehicles are safe when driven properly.

Summary and Conclusion

Jeep Corporation recommends that the petition for the defect investigation be denied by the NHTSA. There is nothing in the petitioner's letter to support his claim that there is a defect in the vehicle. Petitioner offers only his opinion, unsupported by any specialized knowledge or credentials in the field of auto safety, that certain aspects of the vehicle design cause it to be unsafe. There is no information in his letter which would support his position. The police report clearly states that the accident on "Suicide Hill" was caused by the error of an unskilled driver who was not familiar with the terrain.

The Jeep CJ-type vehicles have special design characteristics which enable drivers to traverse terrain not accessible by other types of vehicles. Our field experience confirms that when driven properly these vehicles provide safe transportation both off and on the road.

Sincerely,

K. W. Schang

K. W. Schang
Director -
Vehicle Safety Programs

KWS/ag
Attachments

A. CASE TITLE: James Broderick v. Jeep Corporation and American Motors Corporation et al.

LOCATION: Circuit Court, 17th Judicial District, Broward County, Florida.

DOCKET NO.: 77-3108.

BASIS OF LAWSUIT: Among the allegations the plaintiff alleges instability of the vehicle.

OUTCOME OF LITIGATION: Pending.

B. CASE TITLE: Ronald J. Bogdanski, et al v. American Motors Corporation.

LOCATION: State of Michigan, Wayne County Circuit Court.

DOCKET NO.: Case No. 79-920345 NI.

BASIS OF LAWSUIT: Among the allegations the plaintiff alleges instability of the vehicle.

OUTCOME OF LITIGATION: Pending.

C. CASE TITLE: Robert G. Ross v. Jeep Corporation, American Motors Corporation.

LOCATION: Washoe County, Nevada Second Judicial District Court.

DOCKET NO.: 79-1829, Dept. #4

BASIS OF LAWSUIT: Among the allegations the plaintiff alleges instability of the vehicle.

OUTCOME OF LITIGATION: Open.

D. CASE TITLE: Reeves v. American Motors Corporation et al.

LOCATION: State of Louisiana, Parish of Caldwell, Thirty-seventh District Court.

D. Continued

DOCKET NO.: 12,111

BASIS OF LAWSUIT: Among the allegations the plaintiff alleges instability of the vehicle.

OUTCOME OF LITIGATION: In discovery.

E. CASE TITLE: Kenneth Daniel Haynes, Jr. and Alma Jane Haynes, v. American Motors Corporation and Jeep Corporation.

LOCATION: U.S. District Court for the Western District of Arkansas, Fayetteville Division.

DOCKET NO.: 79-5045

BASIS OF LAWSUIT: Among the allegations the plaintiff alleges instability of the vehicle.

OUTCOME OF LITIGATION: Open.

F. CASE TITLE: Theresa Sobiech, et al v. Jeep Corporation.

LOCATION: U.S.D.C., New York

DOCKET NO.: 77/1178

BASIS OF LAWSUIT: Among the allegations, the plaintiff alleges instability of the vehicle.

OUTCOME OF LITIGATION: Jury found no cause for action.

TRANSCRIPTS

(STAN. CO. ROUGH TERRAIN HIGH)

11 5 78 | 1125 | 9465 | 3649

N. DEL PUERTO CANYON ROAD

TERRY LEE BOYER

R0847370 CAL | 8 2 49 M

75 JEEP M.S. 634 NWQ CALIF

N ROUGH TERRAIN

NA LEFT AT SCENE

453 RODEO PL

SAN JOSE, CAL 578-9756

POLLOUSR

CHEYENNE BOYER 578-9756

453 RODEO PL, SAN JOSE, CALIF — DEL PUERTO HOSP

DAVID BARLOWS 268-6259

6609 MT. HALLY DR. SAN JOSE, CAL — DEL PUERTO HOSP

BOB FISTERER 447-1413

1898 LOMITAS AVE, LIVERMORE, CALIF

MISCELLANEOUS

PH-0066

STAT.	DIST.	ROAD
1		1

D.A.		
	1	

P.D.		11-8

VEHICLE TYPE: 01

ROAD TYPE: X E

STAN. CO. ROUGH TERRAIN RESCUE | 11 5 78 | 1125 | 9465 | 3649

☐ AT INTERSECTION WITH

NO. 1 DIRECTION N OF DEL PUERTO CANYON RD

INJURY, FATAL OR TOW AWAY ☐ YES ☐ NO | STATE HWY VIOLATION ☐ YES ☐ NO

NAME (FIRST, MIDDLE, LAST)	STREET ADDRESS
DRIVER'S LICENSE NUMBER / STATE / BIRTHDATE MO. DAY YR. / SEX / RACE	CITY / STATE / PHONE
VEHICLE YR. / MAKE/MODEL / LICENSE NO. / STATE	OWNER'S NAME ☐ SAME AS DRIVER
DIRECTION OF TRAVEL / ON/ACROSS (STREET OR HIGHWAY)	OWNER'S ADDRESS ☐ SAME AS DRIVER
SPEED LIMIT / DISPOSITION OF VEHICLE ☐ BY DRIVER / ON ORDERS OF	VEHICLE DAMAGE EXTENT ☐ MINOR ☐ MOD. ☐ MAJOR ☐ TOTAL / LOCATION / VIOLATION CHARGED 1. 2.
NAME (FIRST, MIDDLE, LAST)	STREET ADDRESS
DRIVER'S LICENSE NUMBER / STATE / BIRTHDATE MO. DAY YR. / SEX / RACE	CITY / STATE / PHONE
VEHICLE YR. / MAKE/MODEL / LICENSE NO. / STATE	OWNER'S NAME ☐ SAME AS DRIVER
DIRECTION OF TRAVEL / ON/ACROSS (STREET OR HIGHWAY)	OWNER'S ADDRESS ☐ SAME AS DRIVER
SPEED LIMIT / DISPOSITION OF VEHICLE ☐ BY DRIVER / ON ORDERS OF	VEHICLE DAMAGE EXTENT ☐ MINOR ☐ MOD. ☐ MAJOR ☐ TOTAL / LOCATION / VIOLATION CHARGED 1. 2.

DESCRIPTION OF DAMAGE

OWNER'S NAME / ADDRESS / NOTIFIED ☐ YES ☐ NO

WITNESS ONLY	AGE	SEX	EXTENT OF INJURY: FATAL INJURY	SEVERE WOUND DISTORTED MEMBER	OTHER VISIBLE INJURIES	COMPLAINT OF PAIN	INJURED WAS (Check one): DRIVER	PASS.	PED.	BICYCLIST	OTHER	IN VEHICLE NUMBER
☒	23	M	☐	☐	☐	☐	☐	☐	☐	☐	☐	

NAME: JIM CAVRIKAS PHONE: 226-3193

ADDRESS: 478 RODEO PL SAN JOSE, CALIF TAKEN TO (INJURED ONLY)

☒	32	M	☐	☐	☐	☐	☐	☐	☐	☐	☐	

NAME: RON RAGO PHONE: 445-7715

ADDRESS: 470 BELROMA RD. LIVERMORE, CALIF TAKEN TO (INJURED ONLY)

☐	24	M	☐	☐	☒	☐	☒	☐	☐	☐	☐	

NAME: DR#1 PHONE:

ADDRESS: TAKEN TO (INJURED ONLY) DEL PUERTO HOSP.

INDICATE NORTH

MISCELLANEOUS

VEHICLE TYPE	
PARTY 1	
PARTY 2	

ROAD TYPE
- ☐ A CONVENTIONAL, ONE WAY
- ☐ B CONVENTIONAL, TWO WAY
- ☐ C EXPRESSWAY
- ☐ D FREEWAY
- ☐ E OTHER (EXPLAIN IN NARRATIVE)

USE PREVIOUS EDITIONS WITH DISPLEASURE

...SION NARRATIVE | 1125 | 4465 | 36-19 | 11-[illegible]-93 | 4

FACTS - REC'D CALL APPROX 1155 HRS. ARRIVED AT SCENE APPROX 1212 HRS. THE DEL PUERTO CANYON ROUGH TERRAIN AREA IS AN OFF-ROAD VEHICLE AREA (PART OF STANISLAUS CO. PARK SYSTEM). THE AREA OF COLLISION WAS A STEEP GRADE (APPROX 60%+). THE AREA WAS DIRT WITH SEVERAL RUTS. THE WEATHER WAS CLEAR, WITH BRIGHT SUNLIGHT.

VEH #1 - WAS LOCATED APPROX 1 MILE NORTH OF DEL PUERTO CANYON ROAD (APPROX. DEAD NORTH OF MAIN ENTRANCE TO ROUGH TERRAIN AREA). VEH #1 WAS FACING N/E. VEH #1 HAD MINOR ROLL-OVER DAMAGE. VEH #1 HAD NO APPARENT VEH DEFECTS. NO OTHER PROPERTY DAMAGED.

PHYSICAL EVIDENCE - THERE WERE SURFACE GOUGE MARKS IN SURFACE OF HILL FOR APPROX 250' LEADING TO VEH #1. THERE WAS MISC. VEH TRACKS.

...ARY COLLISION FACTOR	RIGHT OF WAY CONTROL	1	2	3	4	TYPE OF VEHICLE	1	2	3	4	MOVEMENT PRECEDING COLLISION
...SECTION VIOLATION:	A CONTROLS FUNCTIONING					A PASSENGER CAR (INCLUDES STATION WAGON)					A STOPPED
...IMPROPER DRIVING*	B CONTROLS NOT FUNCTIONING					B PASSENGER CAR W/TRAILER					B PROCEEDING STRAIGHT
...TOO DRIVER*	C CONTROLS OBSCURED					C MOTORCYCLE/SCOOTER					C RAN OFF ROAD
...DRUNK*	X D NO CONTROLS PRESENT					D PICKUP NO PANEL TRUCK					D MAKING RIGHT TURN
WEATHER	TYPE OF COLLISION					E PICKUP OR PANEL TRUCK W/TRAILER					E MAKING LEFT TURN
...AR	A HEAD-ON					F TRUCK OR TRUCK TRACTOR					F MAKING U TURN
...DY	B SIDESWIPE					G TRUCK OR TRUCK TRACTOR W/TRAILER(S)					G BACKING
...ING	C REAR END					H SCHOOL BUS					H SLOWING - STOPPING
...ING	D BROADSIDE					I OTHER BUS					I PASSING OTHER VEHICLE
	E HIT OBJECT					J EMERGENCY VEHICLE					J CHANGING LANES
	X F OVERTURNED					K HIGHWAY CONSTRUCTION EQUIPMENT					K PARKING MANEUVER
	G AUTO/PEDESTRIAN					L BICYCLE					L ENTERING TRAFFIC FROM SHOULDER, MEDIAN, PARKING STRIP OR PRIVATE DRIVE
LIGHTING	H OTHER*:					M OTHER*:					M OTHER UNSAFE TURNING
...GHT	MOTOR VEHICLE INVOLVED WITH										N CROSSED INTO OPPOSING LANE
...DAWN	X A NON-COLLISION										O PARKED
...STREET LIGHTS	B PEDESTRIAN										P MOVING
...NO STREET LIGHTS	C OTHER MOTOR VEHICLE										Q TRAVELING WRONG WAY
...STREET LIGHTS NOT FUNCTIONING*	D MOTOR VEHICLE ON OTHER ROADWAY										H OTHER*: CLIMBING HILL
...WAY SURFACE	E PARKED MOTOR VEHICLE	1	2	3	4	OTHER ASSOCIATED FACTOR (MAX 3 ITEMS)					
	F TRAIN										
	G BICYCLE					A VC SECTION VIOLATION:					
...ICY	H ANIMAL:										
...(MUDDY, OILY, ETC.)						B VC SECTION VIOLATION:					
...Y CONDITIONS (MAX 3 ITEMS)	I FIXED OBJECT:										
...OP BUTS*						C VC SECTION VIOLATION:					
...ROAD ON ROADWAY*	J OTHER OBJECT:										
...ON ROADWAY*						D VC SECTION VIOLATION:					
...TION-REPAIR ZONE	H OTHER:										
...ROADWAY WIDTH						E VISION OBSCUREMENTS:					
...F FOOD	PEDESTRIAN'S ACTION										
...VIEW AREA	X A NO PEDESTRIAN INVOLVED					F INATTENTION					
...CONDITIONS	B CROSSING IN CROSSWALK AT INTERSECTION					G STOP & GO TRAFFIC					
	C CROSSING IN CROSSWALK - NOT AT INTERSECTION					H EXPRESSWAY/LEAVING RAMP					
	D CROSSING - NOT IN CROSSWALK					I PREVIOUS COLLISION					
	E IN ROAD - INCLUDES SHOULDER					J NOT ACCUSED WITH ROAD					
	F NOT IN ROAD					K DEFECTIVE VEHICLE EQUIPMENT:					
	G APPROACHING/LEAVING SCHOOL BUS					L UNINVOLVED VEHICLE					
						M OTHER*:					
						N NONE APPARENT					

SOBRIETY - DRUG - PHYSICAL	1	2	3	4
A HAD NOT BEEN DRINKING				
B HAD - UNDER INFLUENCE				
C HAD - NOT UNDER INFLUENCE				
D HAD - IMPAIRMENT UNKNOWN				
E UNDER DRUG INFLUENCE				
F OTHER PHYSICAL IMPAIRMENT				
G IMPAIRMENT NOT KNOWN				
H NOT APPLICABLE				

...J. Ocec

I.D. NUMBER 3649

INVESTIGATED BY

I.D. NUMBER

REVIEWED BY

...PROVED

COLLISION REPORT (CHP 555 [illegible])
SUPPLEMENTAL TRAFFIC COLLISION REPORT (CHP 555 OR 555-01)
OTHER:

STAN. CO. ROUGH TERRAIN LGA
DEL PUERTO CANYON

CITY/COUNTY

BILLING NUMBER

YEAR 903

REPORTING DISTRICT

PASSENGERS - ① CHEYENNE BOYER 8 YRS.
455 RODEO PL, SAN JOSE, CALIF
PH 578-9756
② DAVID BERGENS 17 YRS
6609 MT. HOLLY DR, SAN JOSE, CALIF
PH 268-6259

INJURIES - ① DAVID BERGENS REC'D MULTIPLE HEAD INJURIES & WAS PRONOUNCED D.O.A. AT DEL PUERTO HOSP BY DR. DAVID HESS M.D. AT 1520 HRS.
② CHEYENNE BOYER REC'D ABRASIONS ON HEAD & POSSIBLE BROKEN LEG. HE WAS TRANSPORTED TO DEL PUERTO HOSP FOR TREATMENT.
③ DC#1 REC'D CUTS & ABRASIONS & COMPLAINED OF LOWER BACK PAIN. DC#1 WAS TRANSPORTED TO DEL PUERTO HOSP FOR TREATMENT.

STATEMENTS - DC#1 - WE WERE GOING UP THE HILL TO HELP ONE OF OUR FRIENDS WHOSE P/U HAD BECOME DISABLED. WE WERE GOING UP SUICIDE HILL (ABOUT 3/4 WAY UP) WHEN SOMETHING HAPPENED. I DON'T REALLY KNOW WHAT. WE GOT A LITTLE SIDEWAYS & THE JEEP TURNED OVER. THAT'S ABOUT ALL I KNOW.
WIT#1 (PEISTRER & BAGO) WE WERE BELOW THE JEEP AT THE BOTTOM OF THE HILL. THE JEEP WAS GOING UP THE HILL IT WAS APPROX 3/4 THE WAY UP WHEN IT STARTED BOUNCING & HIT A RUT OR SOMETHING & THE FRONT CAME AROUND TO THE RIGHT. THE JEEP TURNED OVER & STARTED ROLLING DOWN THE HILL. IT ROLLED OVER SEVERAL TIMES. THE YOUNG BOY WAS THROWN OUT AS THE JEEP ROLLED. THE DRIVER & OTHER PASSENGER WERE STILL IN JEEP. THE YOUNG MAN IN RIGHT SIDE HAD SEVERAL HEAD INJURIES. WE ALL E.M.T.'S WITH LIVERMORE FIRE DEPT & WE DID WHAT WE COULD TO ASSIST THE INJURED. WE GOT THE MOST SERIOUSLY INJURED WITH THE HEAD INJURIES OFF THE HILL AS SOON AS WE COULD.

PREPARED BY	I.D. NUMBER	PREPARED	REVIEWED	APPROVED BY	I.D. NUMBER	APPROVED
T. Walters	3649	11 6 78				

SUPPLEMENTAL TRAFFIC COLLISION REPORT (CHP 555-03 (Rev. 1-81))

STATE CO. ROUTE PREFIX NO. DEL PUERTO CANYON

DATE 903

CITY/COUNTY

REPORTING DISTRICT

UNIT #2 - (CAVRIKAS) - I WAS BELOW THE HILL ONE OF OUR FRIENDS HAD TROUBLE WITH HIS B/C & WE WERE GOING UP TO ASSIST HIM. TERRY, HIS SON (CHEYENNE) & DAVID BALLOWS (MY BROTHER-IN-LAW) WERE GOING UP IN TERRY'S JEEP. TERRY DIDN'T GO AROUND TO THE RIGHT BUT UP THE FACE OF THE HILL. THE JEEP WAS ABOUT 3/4 THE WAY UP WHEN IT STARTED BOUNCING & GOT TURNED SIDE-WAYS. THE JEEP OVER TURNED & ROLLED ALL THE WAY DOWN THE HILL. DAVID & TERRY REMAINED IN THE JEEP. DAVID HIT HIS HEAD SEVERAL TIMES & WAS HURT BADLY.

OPINIONS & CONCLUSIONS - VEH #1 WAS N/B IN ROUGH TERRAIN AREA (DEL PUERTO CANYON) GOING UP SUICIDE HILL. THE FACE OF SUICIDE HILL HAS A 60% PLUS GRADE. VEH #1 GOT APPROX 3/4 THE WAY UP THE FACE OF HILL WHEN IT LOST TRACTION & MAY HAVE HIT A RUT CAUSING VEH #1 TO GET TURNED SIDEWAYS & OVER-TURN. VEH #1 ROLLED OVER APPROX 5 TO 7 TIMES COMING TO REST AT BOTTOM OF HILL ON IT'S WHEELS. DR #1 & PASSENGER (BALLOWS) WERE STILL IN VEH WHEN IT CAME TO REST. PASSENGER (CHEYENNE BOYER) WAS THROWN OUT OF VEH. THERE WERE TWO E.M.T'S FROM LIVERMORE FIRE DEPT AT SCENE & ASSISTED INJURED. BALLOWS THE MOST SERIOUSLY INJURED WAS MOVED TO PARK ENTRANCE TO MEET AMBULANCE. DR #1 & SON WERE MOVED FROM R.O.I. & TREATED PRIOR TO CHP ARRIVAL. THEY WERE REMOVED FROM HILL IN PARK RANGER VEH TO MEET AMBULANCE AT PARK ENTRANCE. DR #1 HAD CUTS & ABRASIONS & COMPLAINED OF BACK PAIN. CHEYENNE BOYER HAD ABRASIONS & POSSIBLE BROKEN LEG. BALLOWS HAD FATAL HEAD INJURIES & WAS PRONOUNCED D.O.A. AT DEL PUERTO HOSP BY DR. DAVID NESS AT 1320 HRS.

P.O.I. - WAS LOCATED APPROX 1 MILE NORTH OF DEL PUERTO CANYON RD (APPROX 3/4 WAY UP SUICIDE HILL). VEH #1 ROLLED APPROX 200-250'.

CAUSE - EXTREMELY STEEP GRADE. DRIVER UNFAMILIAR WITH ROAD & TERRAIN (DRIVER OWNED VEH APPROX 3 DAYS).

RECOMMENDATIONS - NONE

PREPARED BY	I.D. NUMBER	PREPARED	REVIEWED	APPROVED BY	I.D. NUMBER	APPROVED
T. Galliano	3649	11/6/78		SP Amstutz	6224